Order Form

EMI PORTA
www.emiporta.com
orders@emiporta.com
250 Hamilton Road, Arlington Heights, IL 60005

June-18

Bill to:	Ship to:	Order Date
		Ship Date:
		PO# / Job Name:

Contact Name:

Phone / Fax / Email:

Ship Via & Instructions:

Ship w/EMI Order: YES ☐ NO ☐

Credit Card # | Expiration Date | Security # | Credit Card Billing Address same as; "Bill to" ☐ "Ship to" ☐

Power Gate Operator

KIS100 ☐☐☐ **GS-0** ☐

Chassis Reference # (Gate Travel)
- **36** (29")
- **39** (32")
- **43** (36")
- **49** (42")

L = Left
R = Right

If gate stacks on the....
- Left order a Right Operator
- Right order a Left Operator

(viewed looking into the cab)

Gate Arm
2=Center Pin
5=Offset Pin

Gate Arm Color:
☐ BROWN
☐ GRAY

Input Voltage:
☐ 110VAC
☐ 24VDC

Qty RH:_____ Qty LH:_____

Electro Mechanical Door Lock

EMDL ☐☐ **0** ☐

L = Left
R = Right

Voltage
A = 24AC
D = 24DC

4 = 4 Position Close & Lock in Series

6 = 6 Position Close & Lock Separate Circuits

Qty RH:_____ Qty LH:_____

EMDL 750 Lock Set Back Kits Qty:

☐ Right Hand Kit _____
☐ Left Hand Kit _____
☐ Extra Spacers _____
☐ RH Template _____
☐ _____

Space Guard Door Baffles

White ABS Paintable Plastic
Dim. 31¾" x 31¾ x 2¾ " Qty:_____

8ft Aluminum Sills Qty:

☐ Clear _____
☐ Bronze _____
☐ Lt. Gold _____

Gate Switch GTS100 Only Qty: _____

Gate Switch Mounting Kit

Contents: Gate Switch, Mounting Bracket, Hardware & Gate Arm

☐ BROWN ☐ Center Pin Gate Arm
☐ GRAY ☐ Offset Pin Gate Arm

Qty: _____

COP Cab Operating Panel Qty: _____

Finish	Stops	Phone	P.I. or Light	Options
☐ Brass	☐ 2	☐ No Phone	☐ Position Indicator	☐ Plug-n-Play
☐ Bronze	☐ 3	☐ Phone	☐ Emergency Light	☐ Key Switch **On/Off**
☐ SS	☐ 4		☐ Emergency Light "950 LB Capacity"	☐ Key Switch
	☐ 5			
	☐ 6			

Note any special requests: _____

Hall Station Qty:_____

Finish	Options
☐ Brass	☐ Call Only
☐ Bronze	☐ Call & Car Here
☐ SS	☐ Call & P.I.
	☐ Key Switch **On/Off**
	☐ Key Switch Momentary

Aux. Panel Qty: _____

Finish	Options
☐ Brass	☐ Position Indicator
☐ Bronze	☐ Emergency Light
☐ SS	☐ Emergency Light "950 LB Capacity"

Lunar Plates & Keys Qty:

☐ Brass _____
☐ Bronze _____
☐ Nickel _____
☐ Keys _____

Please complete steps ❶ thru ❻

Accordion Gates

❶ Panel Type

Vinyl Laminates

☐ Antique White	☐ Chalk	☐ Light Oak
☐ Beige/Champagne	☐ Cherry	☐ Mahogany
☐ Birch	☐ Dark Oak	☐ Walnut
☐ Black	☐ Grey	☐ White

Hardwood Veneers

☐ Alder	☐ Maple
☐ Birch	☐ Oak
☐ Cherry	☐ Walnut
☐ Mahogany	☐ White Oak

Full Acrylic
☐ Clear
☐ Bronze

Aluminum
☐ Solid
☐ Perforated

Custom Panels*: _____

❷ Hardware Finishes

☐ Bronze ☐ Nickel ☐ *_____

Vinyl Connectors: ☐ DK. Brown ☐ LT. Grey ☐ LT. Brown ☐ White

Hard Hinge Barrels: ☐ Black ☐ LT. Grey ☐ DK. Brown ☐ White

❸ Options

☐ Metal Panel Frame*
☐ Hard Hinge*
☐ Custom Stain*: _____

☐ Hardwood Clear Coat
☐ Locking Hard Hinge*

☐ Powder Coat*: _____

☐ Clear Vision Panels (max.3) Qty*: _____
☐ Bronze Vision Panels (max.3) Qty*: _____
☐ Perf. Alum. Vision Panels (max.3) Qty*: _____

*** ADDITIONAL COST**

❹ Gate Dimensions:

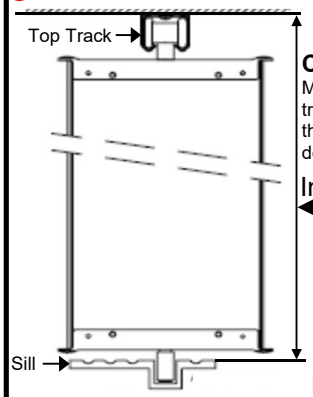

Cab Height:
Measure from where the top track will be or is mounted, to the top of the sill & specify sill depth if less than 0.550"

Inches ☐

Cab Width:
Measure from where the gate will be or is mounted, to the

☐ Inches

❺ Gate Stack:

(viewed looking into the cab)

☐ Right Hand Qty: _____
☐ Left Hand Qty: _____

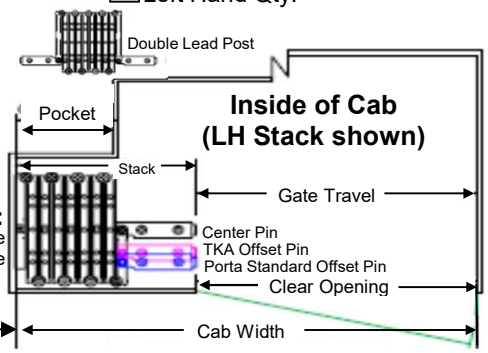

EMI Porta will not guarantee that a gate will fit the cab opening if the given dimensions are not measured exactly as described above.

❻ Qty. of Full Size Panels & Widths

Center Pin	Nom.	Max.	Stack
☐ 7 Panel	34"	36"	6.13"
☐ 9 Panel	42"	44"	7.50"
☐ 11 Panel	51"	54"	8.87"
Offset Pin			
☐ 6 Panel	29"	31.8"	6.13"
☐ 8 Panel	37"	39.8"	7.00"
☐ 8 Panel Dbl Lead Post	43"	8.75"	
☐ 9 Panel**	42"	44"	7.50"
☐ 10 Panel	45"	47.8"	7.88"
☐ 10 Panel Dbl Lead Post	51"	10.25"	
☐ 10 Panel Lock Hinge	43.25"	8.13"	
☐ 11 Panel**	51"	54"	8.87"
☐ 11 Panel Lock Hinge**	47.35"	8.54"	
☐ 12 Panel Lock Hinge	50"	8.94"	

** Mounting panel towards inside of cab.

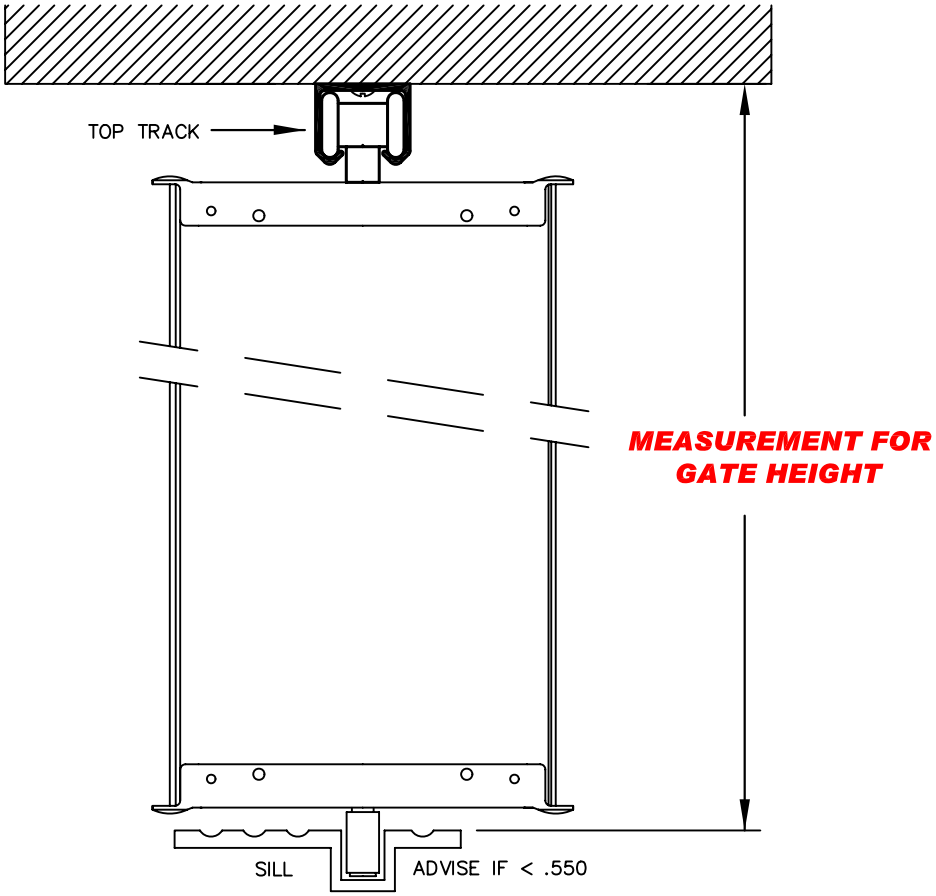

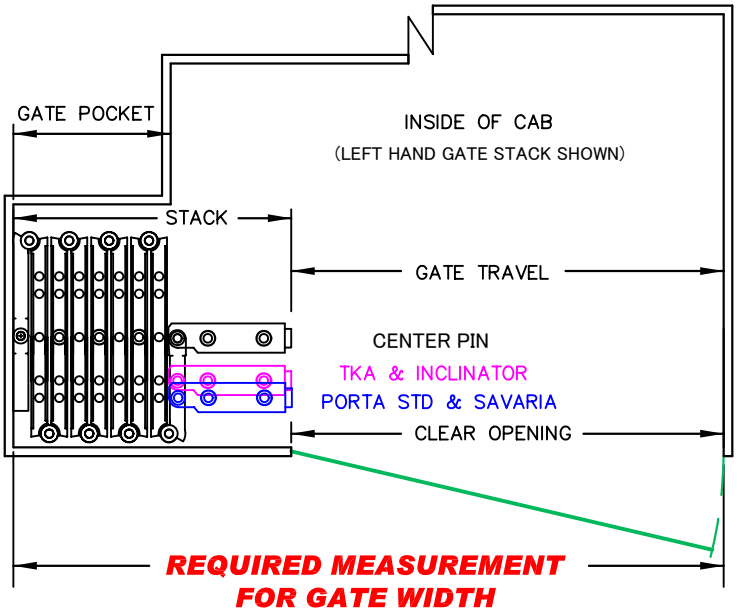

DOUBLE LEADPOST
TOP VIEW

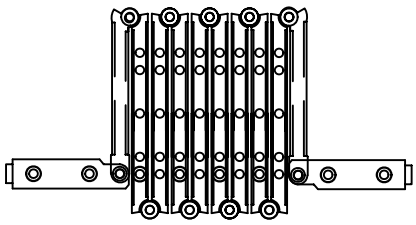

Porta Inc Tel 1.847.593.4900		www.emiporta.com
Name : MEASUREMENTS REQ'D FOR GATE ORDERING		PORTA Inc.
Date: 10-09-15	Rev date :	
File name: Gates/gate-car dim	Rev: 0	